Casting wall thickness for castability and internal pressure

COPY COMPLIANT to the original document resident on the computer system at the time of printing

Index

1. Purpose & Scope 3

2. Definitions 3

3. Thickness calculation 4

3.1. General procedure: description 5

3.2. Thickness calculated by formula (ASME BPVC Section III). 6

4. References 7

COPY COMPLIANT to the original document resident on the computer system at the time of printing

1. PURPOSE & SCOPE

This procedure establishes the requirements for determining the casting wall thickness of radially split, single-volute, and double-volute single-suction pumps, ensuring both castability and compliance with internal pressure design codes.

This procedure applies to Nova Milanese and La Spezia plants.

2. DEFINITIONS

A	Scroll diameter
C.F.	Casting factor
p	Internal design pressure [MPa or psi]
S	Allowable stress [MPa or psi]
Sy	Yield stress at operating temperature [MPa or psi]
Su	Ultimate stress at operating temperature [MPa or psi]
t_o	Minimum corrosion allowance [mm or in]
t_1	Casting wall thickness for castability [mm or in]
t_2	Minimum allowable thickness for ASME BPVC Section III, ND3440
t_{opt}	Minimum allowable thickness [mm or in]

COPY COMPLIANT to the original document resident on the computer system at the time of printing

3. THICKNESS CALCULATION

This procedure is based on two main requirements:

- Castability limits[1].
- Minimum thickness calculated by formula[2].

Pump type A	Pump type B
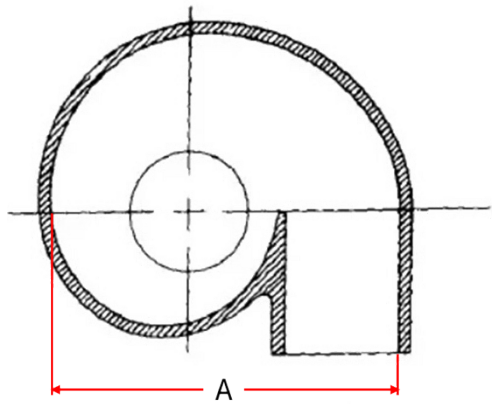 single volute pump	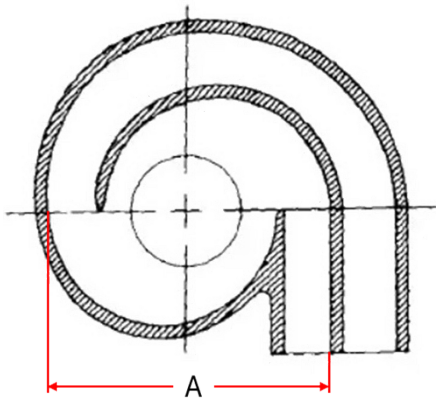 double volute pump

Figure 1: Pump types.

Figure 1 illustrates the geometries considered within this procedure, defining the scroll diameter for both single and double-volute pumps.

The allowable thickness t_{opt} is determined as the greater value between t_1 and t_2.

Mod.546 can be used for all the required calculations.

[1] Based on manufacturer experience.

[2] Based on ASME BPVC Section III, ND3440 Design of specific pump types.

COPY COMPLIANT to the original document resident on the computer system at the time of printing

3.1. General procedure: description

Figure 2 presents the minimum casting wall thickness requirements based on manufacturer experience, thereby providing the definition of the minimum wall thickness necessary from a castability perspective t_1.

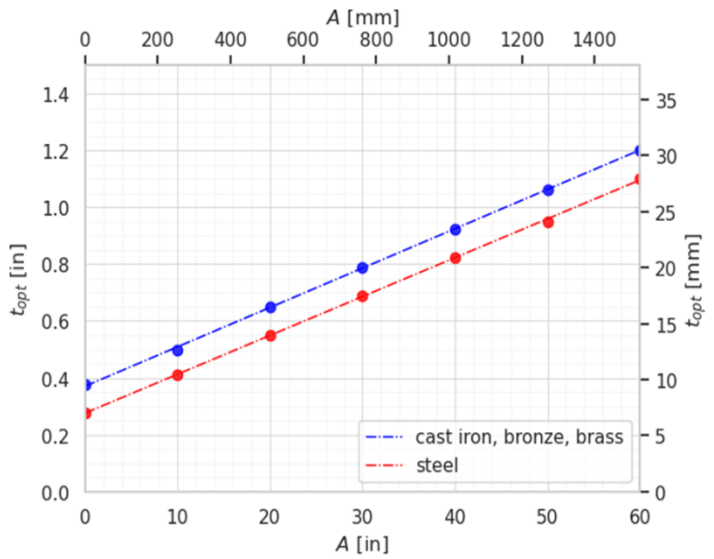

A [in][3]	$t_{cast\ iron}$ [in]	t_{steel} [in]
0	0.3750	0.2750
10	0.5000	0.4125
20	0.6500	0.5500
30	0.7875	0.6875
40	0.9250	0.8250
50	1.0625	0.9500
60	1.2000	1.1000

Figure 2: Castability limits.

[3] The table in S.I. unit is:

A [mm]	$t_{cast\ iron}$ [mm]	t_{steel} [mm]
0.00	9.53	6.99
254.00	12.70	10.48
508.00	16.51	13.97
762.00	20.00	17.46
1016.00	23.50	20.96
1270.00	26.99	24.13
1524.00	30.48	27.94

COPY COMPLIANT to the original document resident on the computer system at the time of printing

3.2. Thickness calculated by formula (ASME BPVC Section III).

The minimum required wall thickness t_2 for internal pressure shall be calculated in accordance with the ASME Boiler and Pressure Vessel Code (BPVC), Section III, ND3440.

Figure 3 summarizes the formulas of ASME BPVC Section III for calculating t_2.

Pump type A	**Pump type B**
$S = C.F. \times \min\left({Su}/{3.5}; {Sy}/{1.5}\right)$	
$t_2 = max\left(\tilde{t}, \frac{pA}{S}\right) + t_0$	$t_2 = max\left(\tilde{t}, \frac{pA}{2S}\right) + t_0$
$C.F.$ casting factor[4] S allowable stress including casting factor Sy yield stress at operating temperature Su ultimate stress at operating temperature t_0 minimum corrosion allowance t_2 minimum allowable thickness for ASME BPVC Section III (not less than $\tilde{t}$) $\tilde{t}$ minimum thickness (6 mm or 0.25 in)	

Figure 3: Thickness formulas.

[4] The casting factor is obtainable from:

Examination	***Casting Factor C.F.***
Visual	0.8
Magnetic particle	0.85
Penetrant liquid	0.85
Radiography	1
Ultrasonic	1
Magnetic particle/penetrant liquid + ultrasonic/radiography	1

COPY COMPLIANT to the original document resident on the computer system at the time of printing

4. REFERENCES

ASME Boiler Pressure Vessel Code, Section III, ND3440 Design of specific pump types

Mod.546 *– Casting wall thickness for castability and internal pressure*

COPY COMPLIANT to the original document resident on the computer system at the time of printing